PART NO. 153

(C) SPECIFICATIONS

BODY: BRASS, ENTEK CU-55 ANTI-TARNISH TREATMENT

INSERT: NYLON

TERMINAL: CRS, ELECTRO-TIN PLATING

INSULATING WASHER: XXXP PAPER BASE PHENOLIC

SPRINGS: NICKEL SILVER, GOLD PLATED

GROUND CLIP: PHOSPHER BRONZE SPRING TEMP.

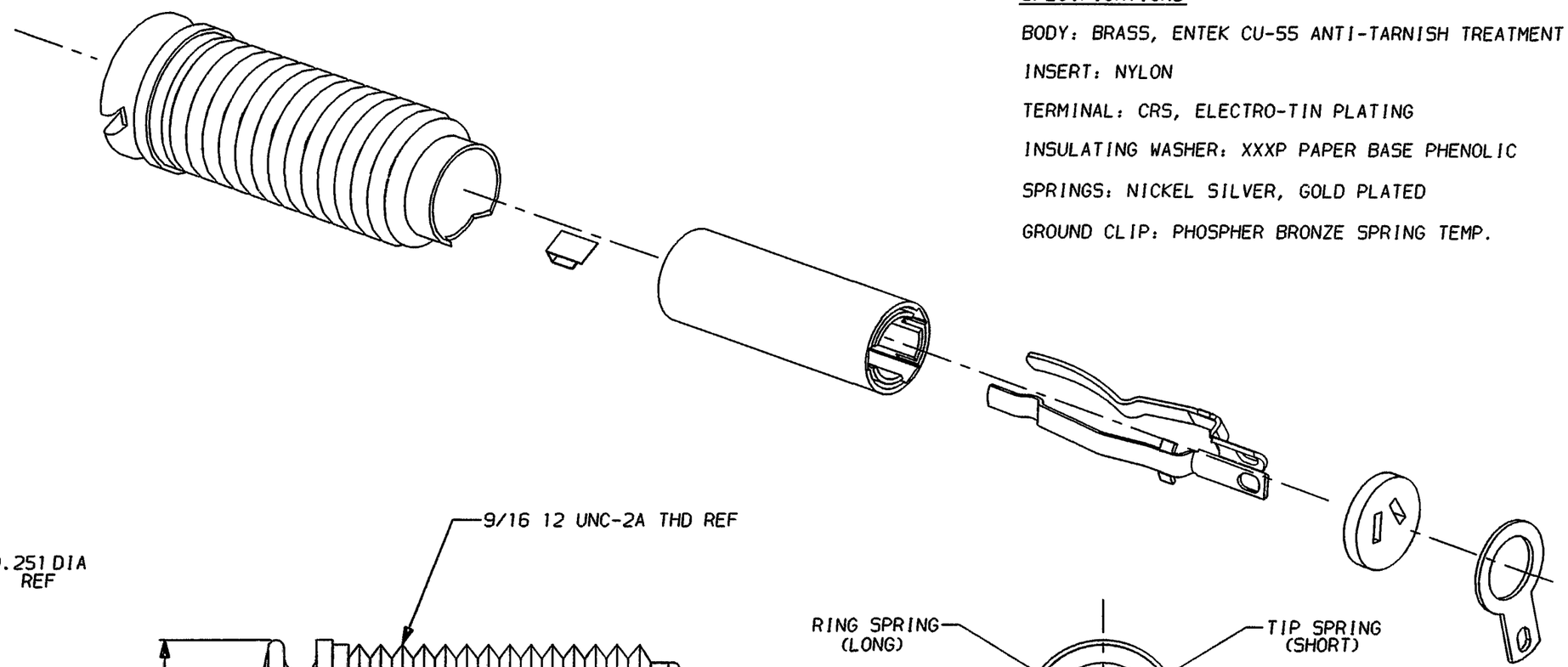

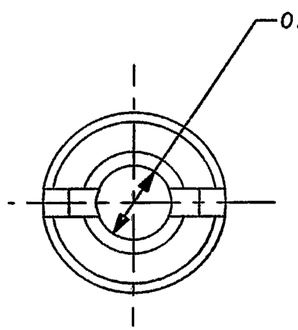

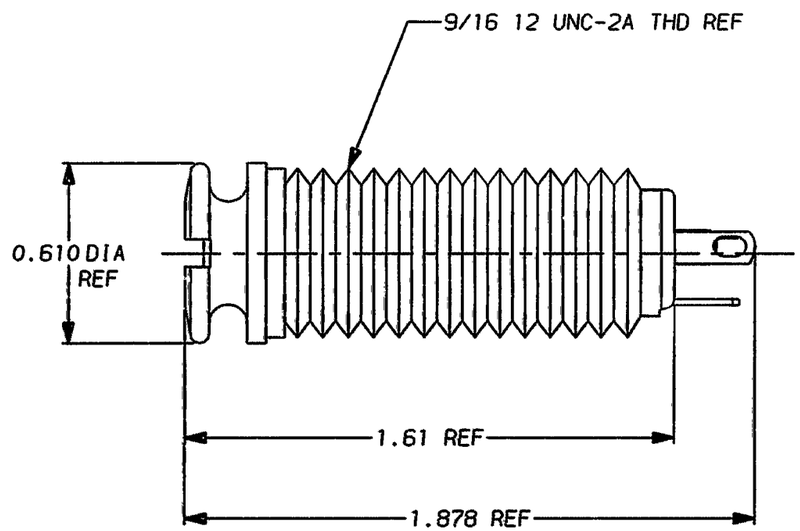

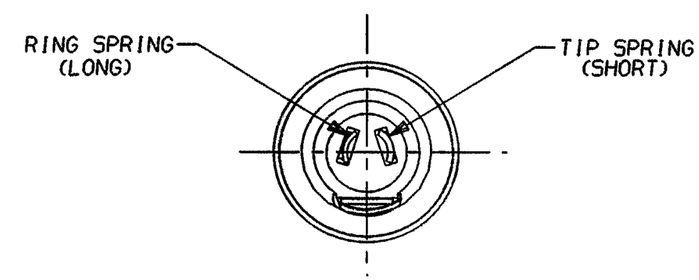

CUSTOMER DRAWING

CAD/CAM DWG. NO.
153.CD

SHEET 1 OF 1

(C) NOTE:

1. SHIPPED WITH HARDWARE UNASSEMBLED.

ISSUE	CHANGE NO.	DATE	BY	APP'D
C	ECO #21957	9-24-97	OM	JF
B	ECO #21598	9-24-97	OM	JF
A	ECO #21426	11-22-96	DA	MW

REVISIONS

☆ STAR SYMBOL DENOTES CRITICAL DIMENSION, SEE S/C ENGINEERING STANDARD ES-0001

UNLESS OTHERWISE SPECIFIED

1. ALL DIMENSIONS IN INCHES
   TWO PLACE DECIMAL ±.01
   THREE PLACE DECIMAL ±.005
   FRACTIONAL DIMENSIONS ±1/64
   ANGLES ±1/2°
   ALL DIA'S CONCENTRIC WITHIN .005 T.I.R.
2. REMOVE ALL BURRS
3. MAKE NO DIMENSIONAL ALLOWANCES FOR APPLIED FINISHES, I.E., PLATING, PAINTING, ETC.
4. HOLES ON THE SAME CENTERLINE MUST BE ALIGNED WITHIN ±.002

DO NOT SCALE DRAWING

THIS DRAWING DESCRIBES A DESIGN CONSIDERED PROPRIETARY IN NATURE, DEVELOPED AND MANUFACTURED BY SWITCHCRAFT INC. AND IS RELEASED ON A CONFIDENTIAL BASIS FOR IDENTIFICATION PURPOSE ONLY.

SIZE	WIDTH	MULT	LBS./M	TEMPER
-	-	-	-	-

FINISH -
SPEC. NO. -

MATERIAL -
SPEC. NO. -

FIRST USED ON -

SCALE 1 = 0.5

DATE DRAWN	BY	CHK'D	APP'D
11-22-96	DA	DA 11-22-96	MW 1-31-97

Switchcraft®

NAME THICK PANEL JAX

PART NO. 153

ISSUE C

(B) ROUTING